Diffuse sensors (Background suppression), metal

FHDM 12N5001

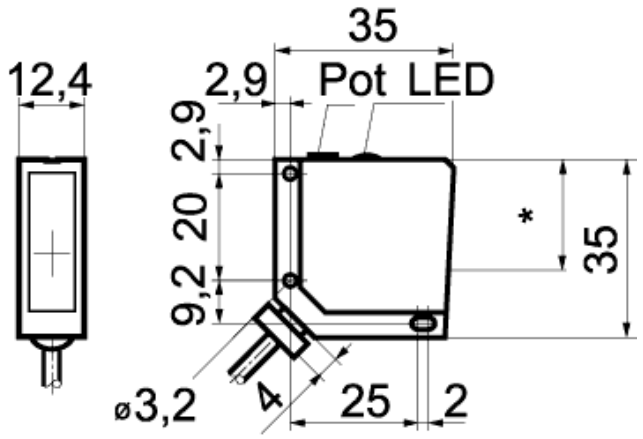

* emitter axis 24,3 mm

Technical Data	
function	background suppression
sensing distance Tw	15 - 300 mm
sensing range Tb (at Tw min)	5 - 15 mm
sensing range Tb (at Tw max)	15 - 300 mm
output	NPN
output state	light/dark operate
housing style	rectangular
width /diameter	12,4 mm
height	35 mm
depth	35 mm
housing material	die-cast zinc
connection	cable
operating range	-
beam focal point	-
repeatability	-
min. detectable contrast	-
output indicator	yellow LED
alignment aid / soiled lens indicator	-
light source	pulsed red diode
wave length	660 nm
laser class	-
voltage supply range +Vs	10 - 30 V
supply voltage	DC
supply current average/peak value	25 / 35 mA
switching current	< 100 mA
voltage drop	< 1,8 VDC
response time / release time	< 1 ms
sensitivity adjustable	mechanical, 5 turn
short circuit protection	yes
reverse polarity protection	yes
temperature range	-25 ... +65 °C
protection class	IP 67
connectors	none
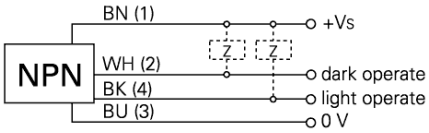
connection diagram